REV.	DESCRIPTION	ECO NO.	PRN NO.	DDN NO.	BY	DATE	APPR
00	RELEASE FOR INFO						

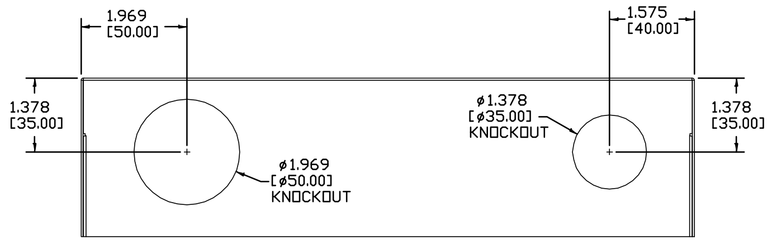

TOP VIEW

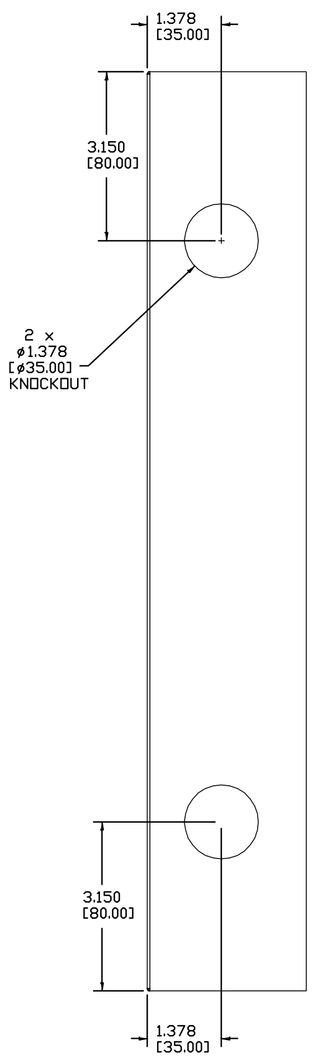

SIDE VIEW

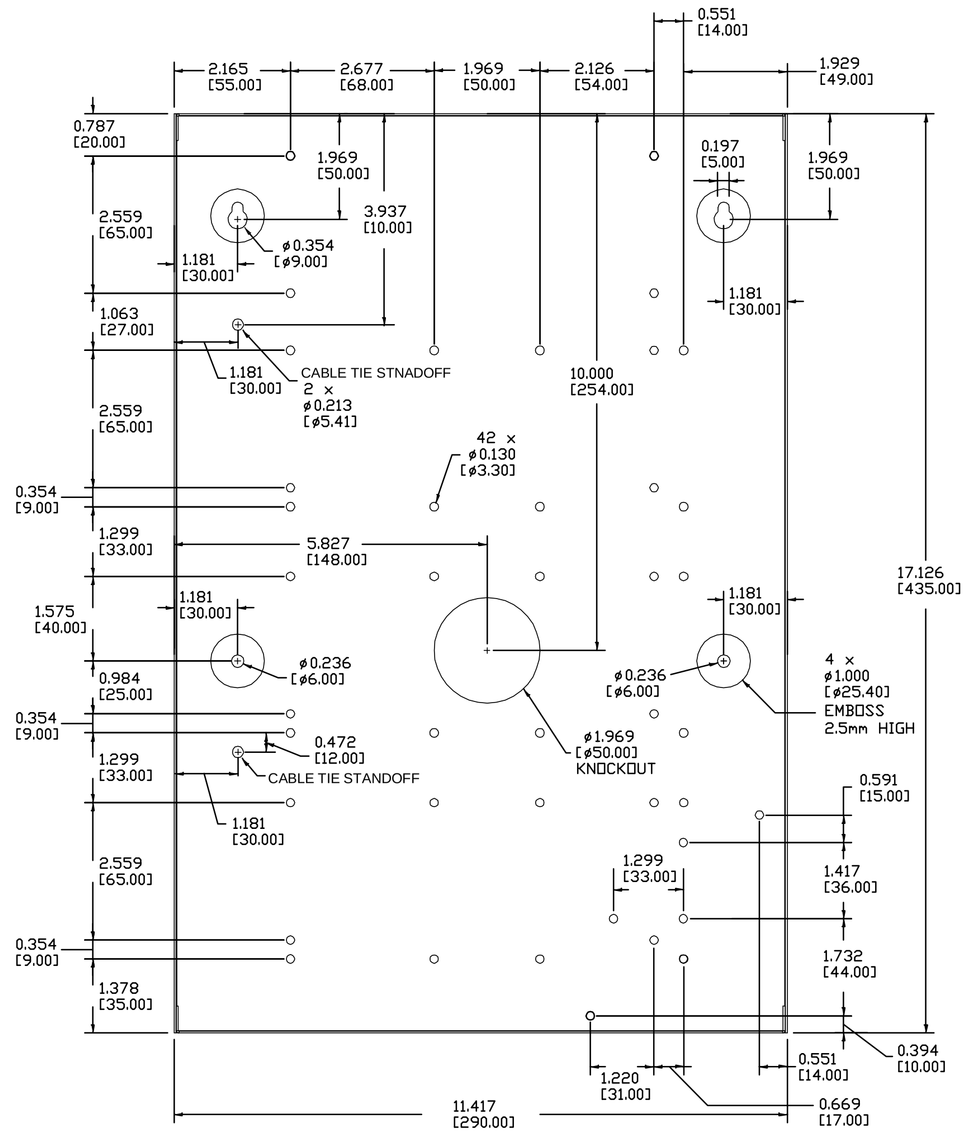

INTERIOR VIEW

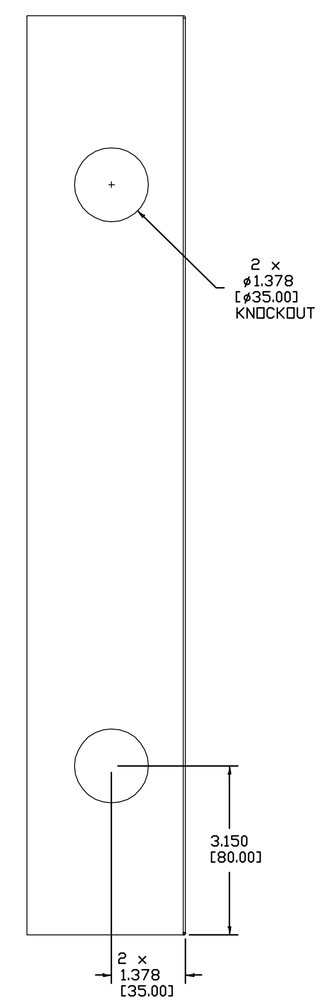

SIDE VIEW

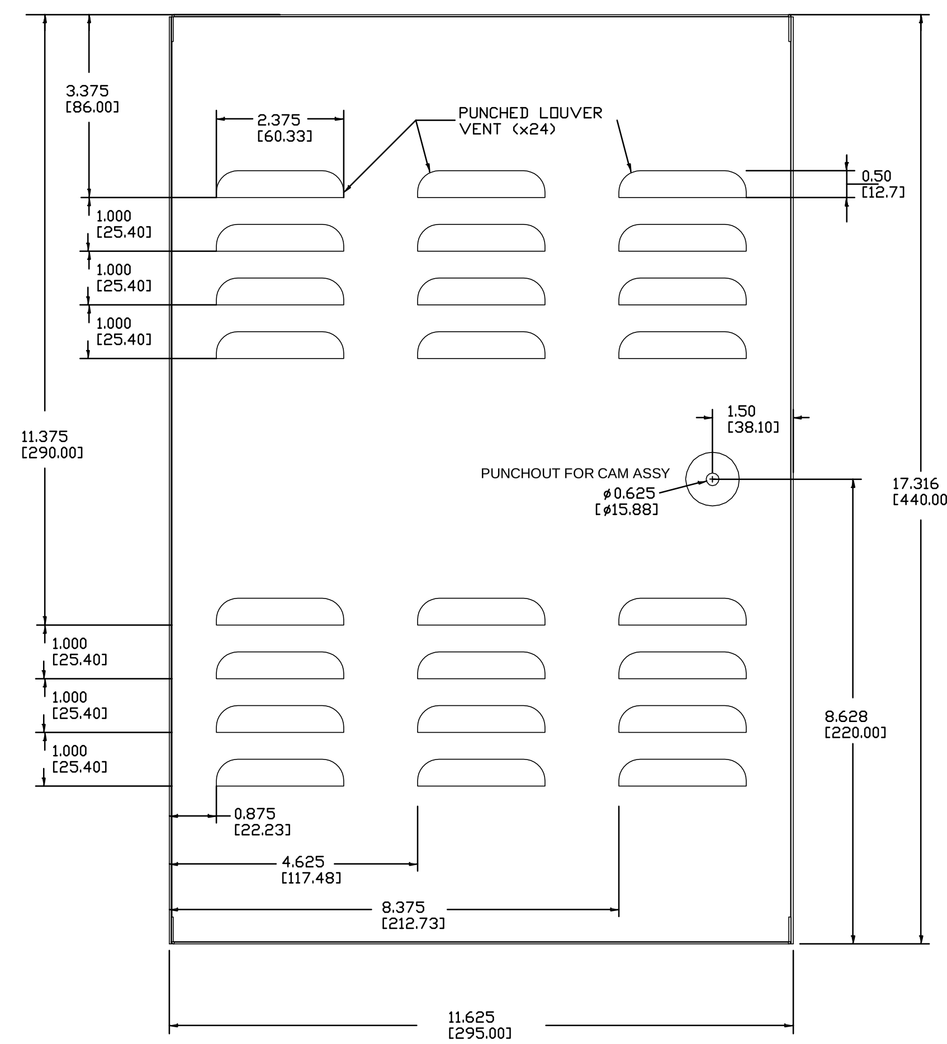

PANEL COVER FRONT VIEW

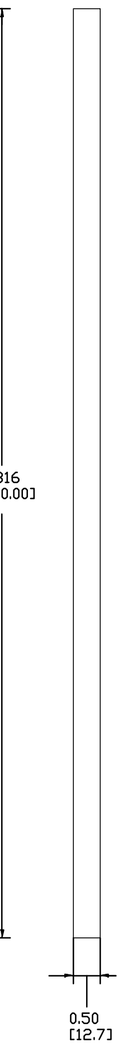

PANEL COVER
SIDE VIEW

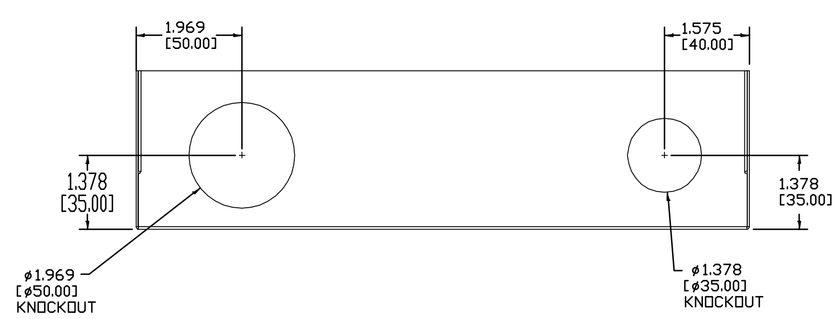

BOTTOM VIEW

THIS METAL ENCLOSURE IS USED WITH THE FOLLOWING ASSEMBLIES:
VAX-IO
VAX-ELV
VAX-"X" D KIT (WHERE "X" = 2, 4, 6 OR 8)

inches
[millimeters]

FILE NO. 131140210100	THIRD ANGLE	REMOVE ALL BURRS BREAK ALL SHARP EDGES DO NOT SCALE DRAWING	MODEL NO. VAX-ENCL-ST
TOLERANCES XX DEC. ± .02 XXX DEC. ± .005 FRAC. ± 1/32 ANG. ± .5°		ALL DIMENSION IN INCHES FINISH ON ALL SURFACES UNLESS OTHERWISE SPECIFIED	TITLE VAX CARD ACCESS METAL ENCLOSURE
MATERIAL		THIS PART MUST CONFORM TO GENERAL MFG. INSTRUCTIONS PER VICON SPEC	VICON INDUSTRIES INC. 135 FELL COURT HAUPPAUGE, N.Y. 11788
HEAT TR.		SIGNATURE / DATE	
FINISH	DRAFTS / DESIGNER / CHECKER / APPROVED		SCALE 1/2 SIZE D SHEET 1 OF 1 REV. 1311-4021-01-00

1311-4021-01-00

THIS PAPER AND THE MATTER SHOWN AND DESCRIBED ARE PROPRIETARY TO VICON INDUSTRIES, INC. THIS PAPER IS ISSUED IN STRICT CONIFIDENCE AND SHALL NOT BE REPRODUCED OR COPIED, OR USED AS A BASIS FOR THE MANUFACTURE OF APPARATUS WITHOUT SPECIFIC WRITTEN AUTHORITY OF VICON INDUSTRIES, INC.